Public Disclosure Authorized

Policy, Planning, and Research

WORKING PAPERS

Trade Policy

Country Economics Department
The World Bank
February 1989
WPS 144

Product Differentiation and Foreign Trade in CGE Models of Small Economies

Jaime de Melo
and
Sherman Robinson

In a simple, one-sector analytical model, the authors show that applying the same assumption about product differentiation to imports as to exports gives rise to a well-behaved, price-taking economy and normally shaped offer curves.

Public Disclosure Authorized

The Policy, Planning, and Research Complex distributes PPR Working Papers to disseminate the findings of work in progress and to encourage the exchange of ideas among Bank staff and all others interested in development issues. These papers carry the names of the authors, reflect only their views, and should be used and cited accordingly. The findings, interpretations, and conclusions are the authors' own. They should not be attributed to the World Bank, its Board of Directors, its management, or any of its member countries.

Policy, Planning, and Research

WORKING PAPERS

Trade Policy

In recent years, two classes of computable general equilibrium (CGE) trade models have been used to investigate external sector policies: single-country and multicountry trade models.

The single-country models have been used to analyze such external sector issues as the impact of restrictions on foreign trade or the impact of changes in net foreign transfers or world prices on the equilibrium of the real exchange rate. The multicountry models are typically concerned with resource allocation and the welfare implications of tariff reductions.

The authors examine the treatment of exports and imports — and different assumptions about export demand and import supply behavior — in recent single-country CGE models of small economies. They present a simple, one-sector analytical model that captures the major features of the multisector counterpart used in applied models.

They show that applying the same assumption about product differentiation to imports as to exports gives rise to a well-behaved, price-taking economy and normally shaped offer curves.

They illustrate the one-sector model with a numerical example which shows — using different trade substitution elasticities — the implications of the choice of weights used as a proxy for the domestic price index in computations of real exchange rate indices.

The model also shows the role of foreign trade elasticities in the popular Australian model — with traded and nontraded goods. Trade substitution elasticities on the import side play a crucial role in determining the direction of change in the real exchange rate during terms-of-trade perturbations.

This paper is forthcoming in the *Journal of International Economics*.

This paper is a product of the Trade Policy Division, Country Economics Department. Copies are available free from the World Bank, 1818 H Street NW, Washington, DC 20433. Please contact Karla Cabana, room N8-065, extension 61539.

The PPR Working Paper Series disseminates the findings of work under way in the Bank's Policy, Planning, and Research Complex. An objective of the series is to get these findings out quickly, even if presentations are less than fully polished. The findings, interpretations, and conclusions in these papers do not necessarily represent official policy of the Bank.

Produced at the PPR Dissemination Center

Product Differentiation and the Treatment of Foreign Trade in Computable General Equilibrium Models of Small Economies

by
Jaime de Melo and Sherman Robinson

TABLE OF CONTENTS

1. Introduction 1

2. A Small-Country Model with Differentiated Trade 5

2.1 Model Equations 5

2.2 A Graphical Presentation

3. Terms of Trade and Transfers: A Graphical Analysis 11

3.1 Terms-of-Trade Change 11

3.2 An Increase in Foreign Transfers 14

4. A Numerical Example 16

5. Conclusions 22

Appendix 25

Footnotes 29

References 31

Sherman Robinson is a member of the Department of Agricultural and Resource Economics, University of California, Berkeley. We thank David Roland-Holst for help with derivations in the appendix, Taeho Bark, T.N. Srinivasan for discussions, a referee for very incisive comments, and Gabriel Castillo and Jackson Magargee for research and logistic support. This paper is forthcoming in the Journal of International Economics, JEL classification 410.

1. Introduction

In recent years, two classes of computable general equilibrium (CGE) trade models have been used to investigate external sector policies: single-country and multi-country trade models. The multi-country trade models (e.g. Deardorff and Stern (1981) and Whalley (1985)) have typically been concerned with resource allocation and welfare implications of tariff reductions such as those of the Tokyo round. The single-country models have been used to analyze a variety of external sector issues ranging from the impact of restrictions on foreign trade (e.g. tariffs and QRs, with or without rent seeking) to the impact of changes in net foreign transfers or world prices on the equilibrium real exchange rate. 1/

For both types of models, the results from policy simulations depend on how export and import behavior are modelled. In a recent paper, Whalley and Yeung (1984) -- henceforth WY -- examine this issue for single country models using the term "external closure" to refer to the various assumptions about export demand and import supply behavior. After noting that most applied models are quite disaggregated and separate traded and non-traded goods, they review three external closure rules in single-country models. Among the issues they raise, WY choose a simple two commodity (import and export) formulation with no non-traded commodity to show that in these models, "... there is no currency exchange rate in the conventional use of the term as a financial magnitude determined from financial sector activity." 2/

In the second of their three external closures, WY assert that the imposition of a zero trade balance condition in a two-good CGE model that incorporates product differentiation (i.e. the Armington assumption) with price-taking behavior for imports along with a downward-sloping foreign export

demand curve with constant elasticity yields a model in which both domestic and foreign offer curves lie on top of one another. 3/

They are dissatisfied with this specification and go on to propose a third external closure: a model with price taking behavior and no product differentiation for tradables, plus the inclusion of non-tradables. In essence, this closure corresponds to a multi-sector version of the well-known dependent economy (Australian) trade theoretic model. They show that in this formulation, there is an exchange rate variable -- or "parameter," as they call it -- that measures the relative price between composites of traded and non-traded goods. They show that, in this model, the foreign offer curve is a straight line, while the domestic offer curve has some elasticity (thereby following conventional trade theory). However, they feel that this price taking assumption will be unpalatable in empirical models of large countries. More generally, they note that this model will not allow two-way trade, or cross hauling, which is widely observed in trade statistics at the aggregation levels used in all CGE models, and so is not a desirable specification.

Several points about the WY analysis deserve comment. First, the role of the exchange rate in computable general equilibrium models has received attention for some time and we can find no case in which modelers interpret it as a "financial variable." 4/ Second, the two-good model with both goods traded that WY use in their first discussion of external-sector closure does not represent well any of the applied CGE trade models, which invariably include some non-traded goods. 5/ Third, an external closure using a price-taking formulation for all tradables in a model with perfect substitution will be unpalatable for stronger reasons than those mentioned by WY. If the price-taking formulation is not accompanied by some product

differentiation, the model will generate extreme specialization whenever it is subjected to a policy simulation such as reduction in tariffs. The assumption of a downward-sloping foreign demand curve, while it will help (but not fix) the specialization problem, will lead to unrealistically strong terms-of-trade effects that will dominate the welfare results of policy changes in single country models. 6/

The essence of the external sector specification of most recent single-country CGE trade models can be captured by a simple one sector model with symmetric product differentiation for imports and exports. This model embodies (and extends) well-understood results from neoclassical trade theory and provides a compact statement of the external closures found in most applied models. The model is also useful to illustrate the role of trade elasticities in the Australian (dependent economy) model with traded and non-traded goods. We show that the "parameter" referred to by WY in the analysis of their third external closure still exists in this model. We indicate how its equilibrium value is influenced by the assumed values for trade substitution elasticities and by the choice of weights used as a proxy for the domestic price index in computations of real exchange rate indices.

With this framework, we provide a systematic exploration of the behavior of a small price taking economy characterized by product differentiation on both the export and import sides. We argue that reasons for introducing product differentiation on the export side are the same as those for introducing product differentiation on the import side; namely, that multi-sector models, even when they are disaggregated, do not disaggregate products sufficiently. This assumption has in fact been used by Dixon et al (1982) and by Deardorff and Stern (1986). In Dixon et al. (1982), the justification is based on producers engaging in joint production, as in the

original presentation by Powell and Gruen (1968). While plausible under certain circumstances, we think that a more general reason along the lines pointed out above is the more plausible rationale for introducing symmetric product differentiation. This said, it should be pointed out (see Anderson (1985)) that calculations of the costs of protection carried out in aggregate economy-wide models with product differentiation to overcome the problem of specialization may severely understate the costs of protection, at least with respect to partial liberalization. But our purpose here is to study the properties of economywide models, so this issue of bias in results from applied models can be left aside.

The remainder of the paper is organized as follows: In section 2, we present the model and use it in section 3 to show how equilibrium is affected by terms-of-trade shifts and by changes in net capital inflows, both common experiments in single country models. The model is also useful for illustrating the role of elasticities in popular trade-theoretic models that include traded and non-traded goods. In Section 4, we derive an expression for the elasticity of the domestic offer curve in our model with symmetric product differentiation and set up a numerical example. The expression and the numerical example show the role of initial conditions (i.e. openess to trade) and of values of trade substitution elasticities in determining the shape of the well-behaved domestic offer curve. We also illustrate the well-known fact that -- once weights entering the relevant price indices are chosen -- the equilibrium value of the real exchange rate (defined as the relative price of traded to non-traded goods) is indeed independent of the choice of numeraire.

2. A Small-Country Model with Differentiated Trade

For many developing countries, it is reasonable to assume that the country is "small" on world markets and cannot affect its international terms of trade. However, it is also reasonable to assume that world prices in the tradable sectors do not dominate the domestic price system. We present below a simple analytic model which captures these stylized facts and discuss its theoretical structure.

Make the following assumptions: (1) domestically produced and imported goods are imperfect substitutes -- the Armington assumption; (2) domestically produced goods sold on the domestic market are imperfect substitutes for goods sold on the export market; (3) the economy can purchase or sell unlimited quantities of imports and exports at constant world prices -- the small-country assumption; (4) aggregate production is fixed; and (5) there is a balance of trade constraint.

2.1 Model Equations

In Table 1, equations 1 and 2 give the trade aggregation functions. In applied models, and in the numerical example of Section 4, equation 1 is a CES function, following Armington, and equation 2 is a CET (constant elasticity of transformation) function. 7/ For the analysis here, we only require that F(-) be convex to the origin, that G(-) be concave, and that both be homogenous of degree one in their arguments. Given the assumption of fixed output, which is equivalent to assuming full employment, G(-) represents a production possibility frontier delineating the tradeoffs between exports and domestic supply.

Equations (3) and (4) translate foreign prices into domestic prices using a conversion factor, r, which we refer to as the "nominal" exchange

Table 1
A One Sector Small-Country Model with Differentiated Trade

(1)	$Q = F(M,D^d)$	Import aggregation function
(2)	$\bar{X} = G(E,D^s)$	Export transformation function
(3)	$p^m = r\,\bar{\pi}^m$	Import price
(4)	$p^e = r\,\bar{\pi}^e$	Export price
(5)	$p^q = f_1(p^m,p^d)$	Consumer price
(6)	$p^x = g_1(p^e,p^d)$	Producer price
(7)	$\frac{M}{D^d} = f_2(p^m,p^d)$	Import demand equation
(8)	$\frac{E}{D^s} = g_2(p^e,p^d)$	Export supply equation
(9)	$\bar{\pi}^m M - \bar{\pi}^e E = \bar{B}$	Balance of trade constraint
(10)	$D^d - D^s = 0$	Domestic demand - supply equilibrium

where:

M,E	=	imports, exports
D^d,D^s	=	demand and supply of the domestic good.
Q	=	composite consumer good
$\bar{X}$	=	composite production
$\bar{\pi}^m$	=	world price of imports
$\bar{\pi}^e$	=	world price of exports
r	=	Conversion factor; "nominal" exchange rate
p^m	=	domestic price of imports, M
p^e	=	domestic price of exports, E
p^d	=	domestic price of domestic sales, D
p^q	=	domestic price of composite consumer good, Q
p^x	=	domestic price of composite output, X
$\bar{B}$	=	exogenous balance of trade, or net foreign capital inflow (or outflow for negative $\bar{B}$).

rate. It should be clear, but is worth repeating (as has been pointed out by DMR and WY) that this conversion factor, r, is not a financial exchange rate variable. Though often referred to as "the" exchange rate, we refer to it as the "nominal" exchange rate so as not to confuse it with the real exchange rate -- the relative price of the domestic good in terms of the (fixed) traded goods -- which is determined by the model. Indeed, the model could be written without reference to r -- as is common in trade theory -- by implicitly choosing it as numeraire. We use this approach below in Section 2.2. However, since we wish to consider alternative choices of the numeraire, we maintain r in our formulation. 8/

We assume that producers maximize profits and that demanders minimize the cost of purchasing a given quantity of composite good Q. 9/ These assumptions lead to equations 5 to 8. Equations 5 and 6 define composite good prices and are effectively dual cost functions. They are homogeneous of degree one in input prices. Equations 7 and 8 give the demand for imports and supply of exports arising from the first-order conditions.

Since only relative prices matter, the functions describing the model are homogeneous of degree zero in prices. To set the absolute price level, select r as numeraire. Equation 9 gives the equilibrium condition for the balance of trade; that in foreign units (expressed in terms of the numeraire) the value of imports equals the value of exports plus $\bar{B}$. Finally, equation 10 is the equilibrium condition for the supply and demand for the domestic good. Overall, the model has 10 equations and 10 endogenous variables: Q, M, D^d, D^s, E, P^m, P^e, P^d, P^q, and P^x. The homogeneity of equations 1 and 2 guarantee that the system satisfies Walras' Law. This can be easily seen by writing out the aggregate income and expenditure equations:

$P^x\overline{X} + r\overline{B}$	total income
$P^x\overline{X} = P^eE + P^dD^s$	the value of production or GDP
$P^qQ = P^mM + P^dD^d$	Total expenditure or absorption

Given the equilibrium conditions in equations 9 and 10, it follows that income always equals expenditure. The variable, $\overline{B}$, in equation 9, denominated in foreign units, can be thought of as representing an increase (or decrease) in real income measured in terms of imports, given the fixed world price of imports.

2.2. A Graphical Presentation

This model is simple enough so that its properties can be shown graphically. Figure 1 presents a four-quadrant diagram that captures the essential features. For convenience, choose units so that the exogenous world prices for both exports and imports equal one. Also, set r as numeraire and initially assume $\overline{B} = 0$. In this case, the balance of trade equation defines the foreign offer curve and graphs as a 45-degree line in quadrant 1. The production possibility frontier, PP, (equation 2) is graphed in quadrant 4. Quadrant 3 has a 45-degree line which simply indicates that domestic goods, D, which are supplied to the domestic market, are available for demand, defining equilibrium in the domestic goods market. The concave curve, CC, in quadrant 2 is the consumption possibility frontier, which is the locus of points that simultaneously satisfy the balance of trade constraint in quadrant 1 and the production possibility frontier in quadrant 4. Given our choice of units and the assumption that the balance of trade equals zero, the consumption possibility frontier in quadrant 2 is a mirror image of the production possibility frontier, PP, in quadrant 4.

Figure 1
EQUILIBRIUM IN THE SMALL COUNTRY CASE

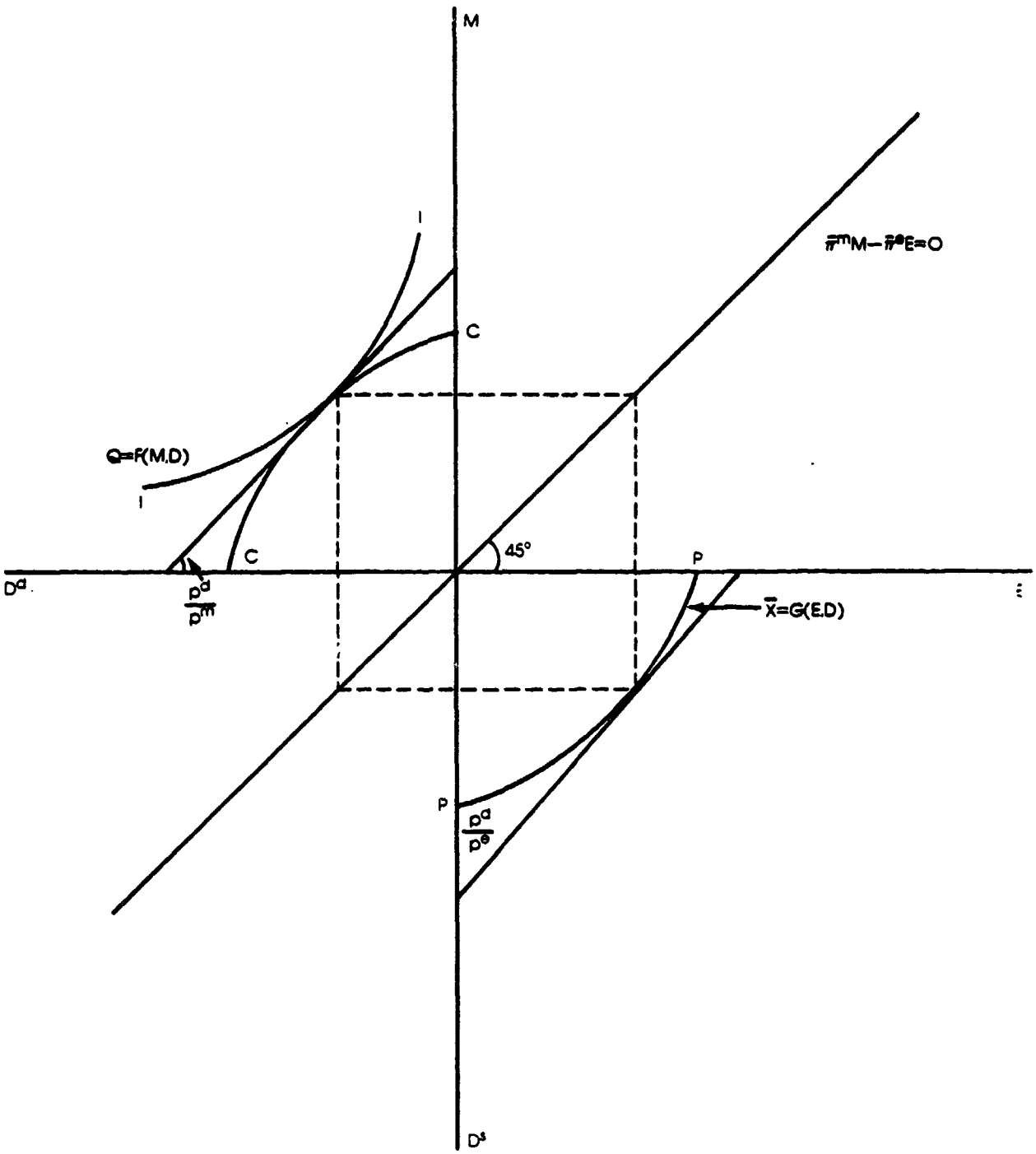

World Bank — 43

In quadrant 2, the import aggregation function, equation 1, generates a series of "iso-good" curves, II, analogous to indifference curves. 10/ Equilibrium is achieved at the point of tangency with the consumption possibility frontier. At this point, the equilibrium price ratios, P^d/P^m and P^d/P^e, equal the slope of the tangents in quadrants 2 and 4, and are derived from the first-order conditions in equations 7 and 8. 11/ Given our choice of units, the two ratios are equal, and the equilibrium value of P^d is the equilibrium value of the relative price of non-tradables to tradables. Thus, selecting r as numeraire is convenient since it allows us to interpret P^d as the real exchange rate. In this model, the foreign offer curve is the 45° line in the M,E quadrant in figure 1. We derive in section 4 the elasticity of the domestic offer curve and show that it is a well-behaved curve which intersects the straight-line foreign offer curve.

Consider the limiting "Ricardian" case corresponding to an infinitely elastic supply of exports. Then PP becomes a straight line, which in turn implies a straight line consumption possibility curve. The real exchange rate is now fixed and, as in a Ricardian world, is determined by technology. Substitution possibilities in demand only determine the composition of production for domestic and for export sales.

Our graphical presentation can also be used to consider the closure criticized by WY; namely, a specification with product differentiation on the import side and with less than infinitely elastic foreign export demand. In this case, the model would include an extra equation, $\pi^e = [\frac{E}{E_0}]^{-1/\zeta}$, where $\zeta > 1$ is the constant price elasticity of foreign export demand and π^e is now endogenous. Now the foreign offer curve is given by: 12/

$$M = E_0^{1/\zeta} E^{\alpha} \; ; \quad \alpha \equiv 1 - 1/\zeta \; ; \quad 0 < \alpha < 1 \qquad (2.1)$$

which is derived by substituting the above expression for π^e into the balance of trade constraint. This case is depicted in figure 2, where E_0 is the equilibrium under the small country assumption (i.e. $\alpha = 1$). With market power, the foreign offer curve becomes OC, and the corresponding consumption possibility curve is C_oC_1 with new equilibrium at E_1. From the diagram, one can see that assuming market power leads to an optimum with less trade and a correspondingly lower real exchange rate.

Clearly this model, which is representative of many single-country CGE models, does not suffer from the problem of overlapping offer curves described by WY in their discussion of a similar model with constant price elasticities of foreign demand and import supply. As we have shown, the foreign offer curve in this model has the usual shape. As we analyze in some detail below, the shape of the domestic offer curve depends only on the parameters of the export transformation and import aggregation functions and also has the usual shape. Hence the two offer curves will intersect, but will certainly not coincide.

3. Terms-of-Trade and Transfers: A Graphical Analysis

Is the one sector model with differentiated trade well behaved? We examine two typical experiments conducted with single-country models: a terms-of-trade shift and a change in foreign transfers.

3.1 Terms-of-Trade Change

Figure 3 shows the effect on equilibrium of an improvement in the terms-of-trade ($TOT_0 \rightarrow TOT_1$) corresponding to an increase in π^e, $d\pi^e > 0$. This terms-of-trade change shifts out the consumption possibility schedule to C_0C_1. Will the economy supply a larger volume of exports at this improved

Figure 2
EQUILIBRIUM WITH CONSTANT FOREIGN DEMAND ELASTICITY

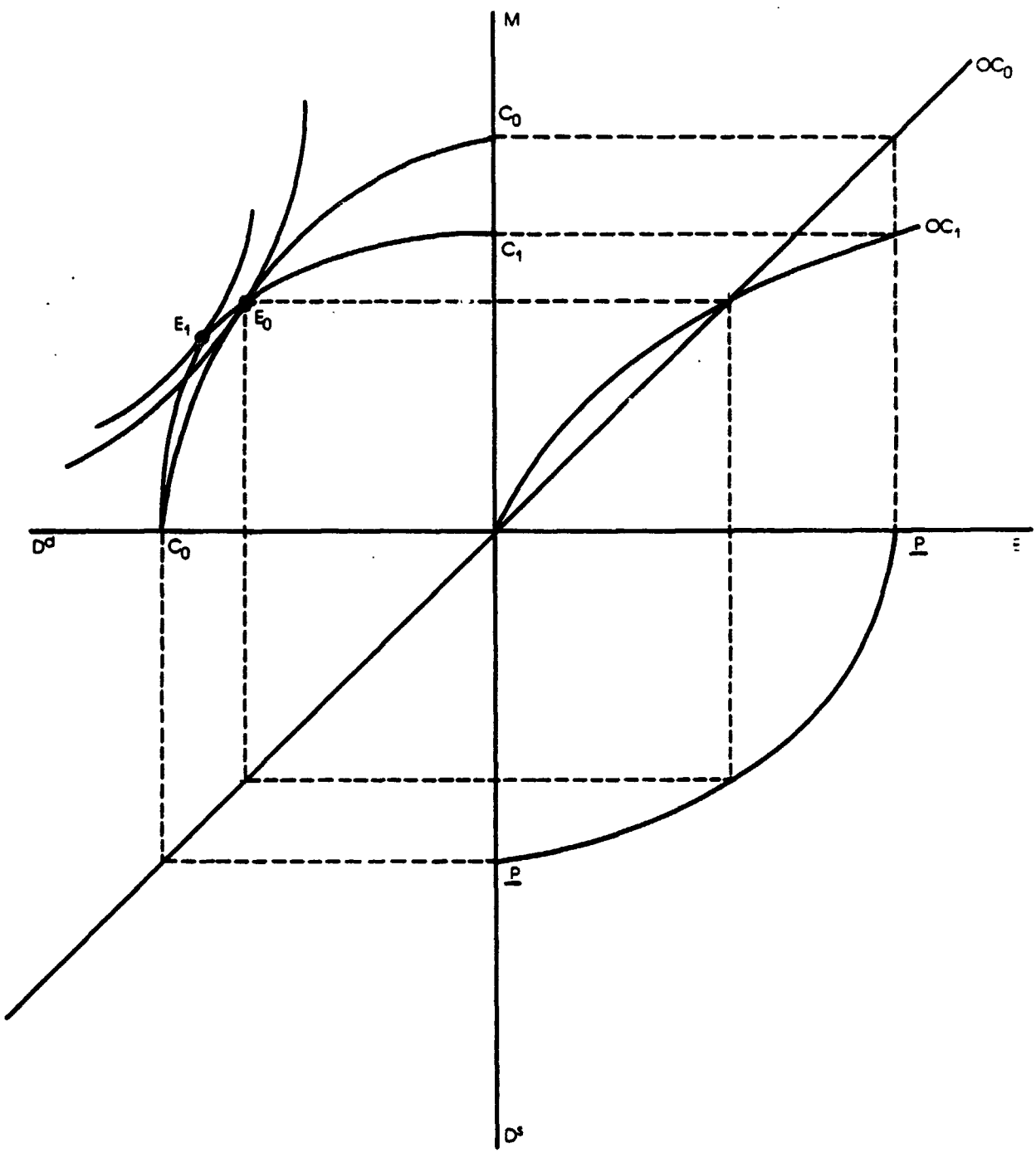

Note: Foreign offer curve derived under the assumption of constant foreign demand elasticity >1

Figure 3
TERMS-OF-TRADE IMPROVEMENT

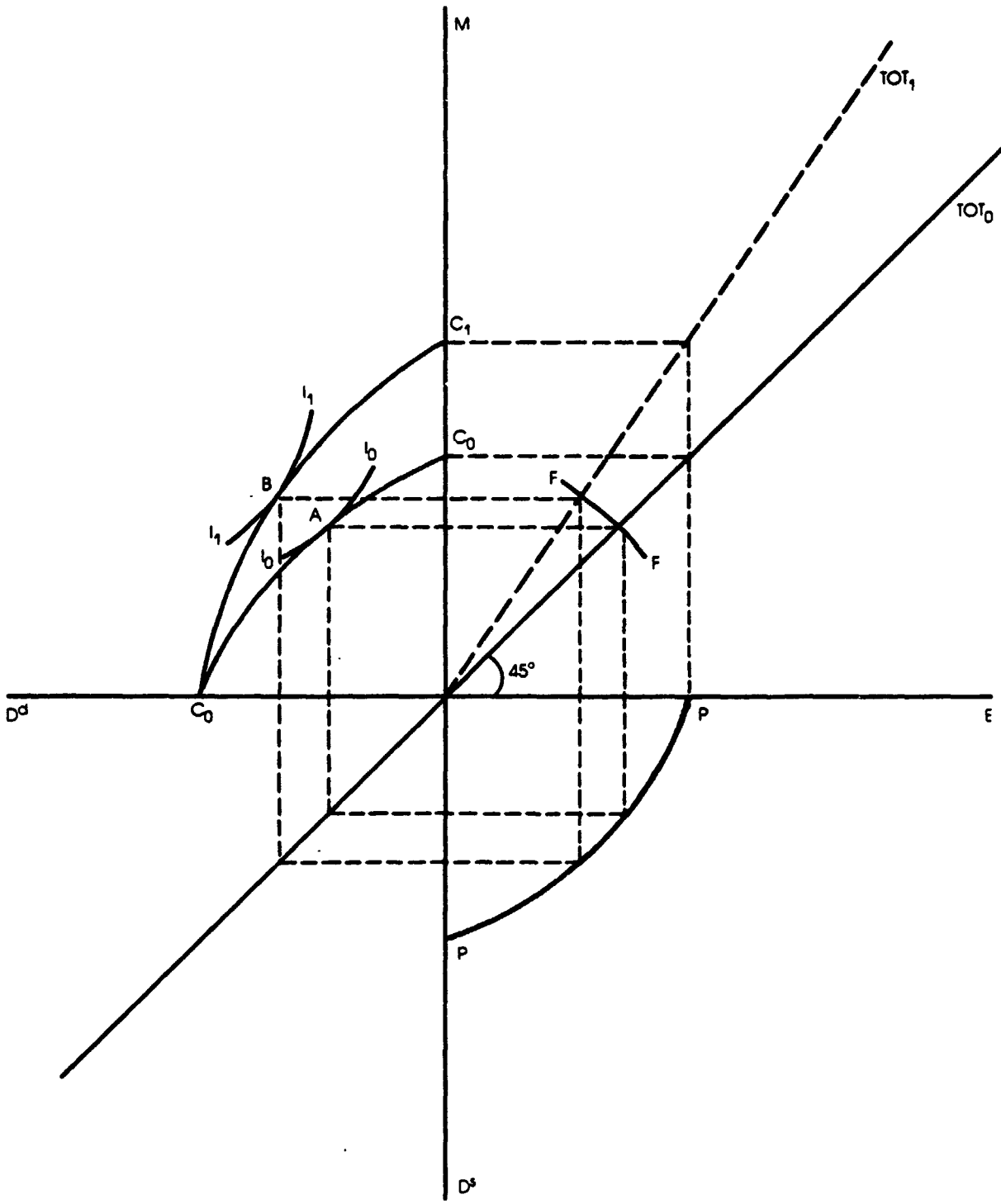

World Bank — 43

terms-of-trade? The result depends on the shape of the domestic offer curve. As drawn in figure 3, exports fall. The demand for the domestic good increases, which in turn implies that the domestic offer curve, FF, is inelastic. 13/ Also note that the real exchange rate will appreciate. In the limiting "Ricardian" case considered above, the real exchange appreciation will be equal to the change in the terms of trade, i.e. $dp^d = d\bar{\pi}^e$.

3.2 An Increase in Foreign Transfers

Figure 4 shows the effect on equilibrium of an increase in foreign transfers. The effect of a transfer, $\bar{B}$, is an upward parallel shift of the external budget constraint to $0_1 0_1$ and the consumption possibility curve to $C_1 C_1$. Will the increase in transfers lead to a real exchange rate appreciation, as one would expect in a model where the domestic good is consumed? Yes, if the domestic goods are not inferior in c sumption, which is the case drawn in figure 4 and is guaranteed for the CES function used in practice. Domestic consumption of D increases, exports fall, and imports rise.

The graphical apparatus developed here can also be used to examine the effects of a change in commercial policy. This is not done here since it does not lead to any new insights about the properties of the external closure under review. We conclude that the specified external closure gives rise to a well-defined real exchange rate whose variations to policy changes is in accord with the usual assumptions of neoclassical trade theory for small economies. The assumption of product differentiation thus leads to a much more realistic small-country model that can accommodate two-way trade and a degree of autonomy in the domestic price system, but retains all the desirable features of the standard neoclassical model.

Figure 4
AN INCREASE IN FOREIGN TRANSFERS

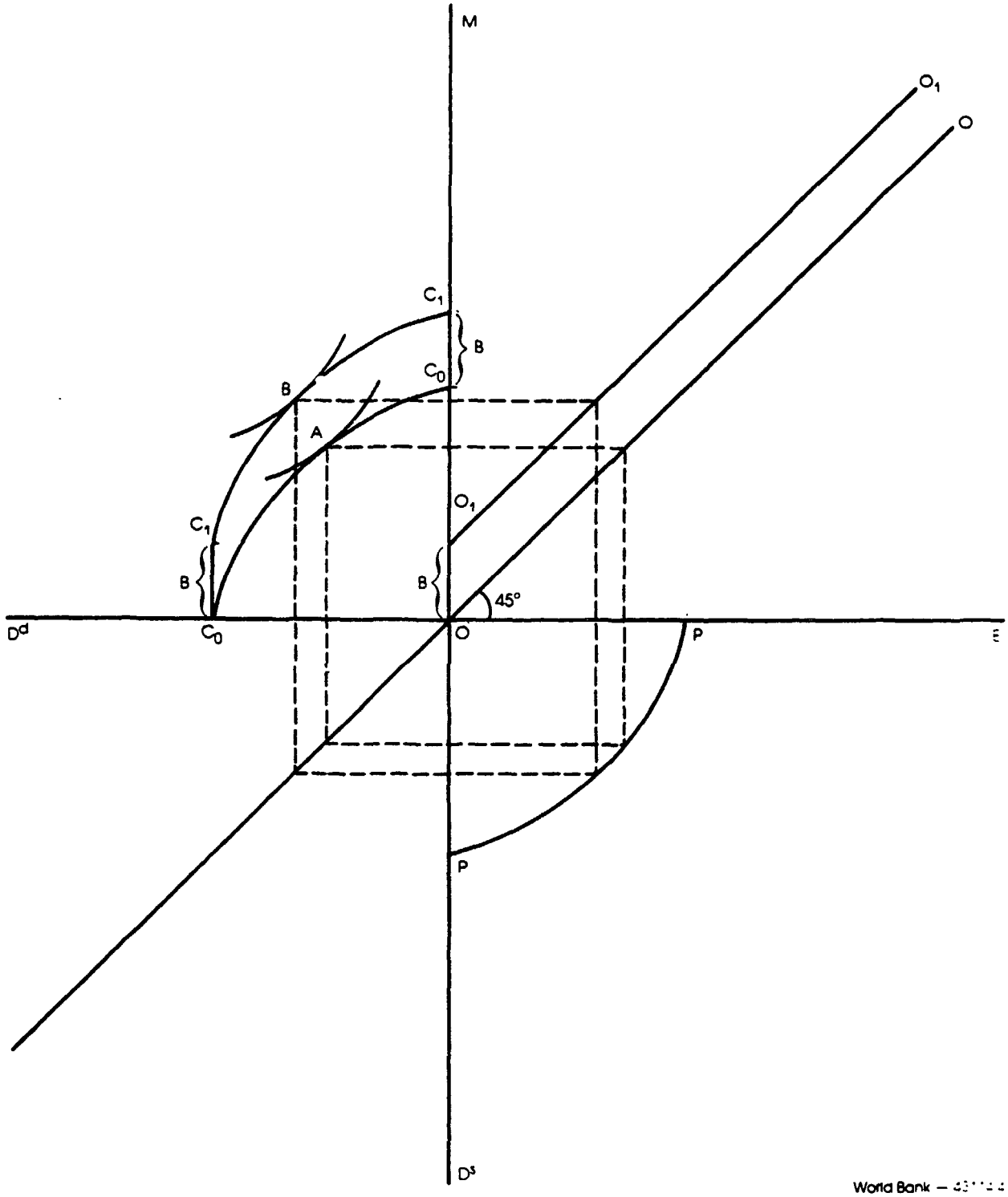

World Bank — 63[illegible]

4. A Numerical Example

We conclude with a simple numerical example to show the influence of different parameter values on computed equilibria for an increase in transfers and a terms-of-trade change. Assume, as in typical applications, that the import aggregation function is CES and the export transformation is CET. Then equations (1) and (2) in Table 1 are given by:

$$Q = \bar{A}_1 \left(\beta M^{-\rho} + (1-\beta) D^{-\rho} \right)^{-\frac{1}{\rho}} ; \qquad \sigma = \frac{1}{1+\rho} \qquad (4.1)$$

$$\bar{X} = \bar{A}_2 \left(\alpha E^{h} + (1-\alpha) D^{h} \right)^{\frac{1}{h}} ; \qquad \Omega = \frac{1}{h-1} \qquad (4.2)$$

where a bar denotes an exogenous variable and σ and Ω are elasticities of substitution and transformation respectively. Following the calibration common in CGE models, we construct parameters for the CES and CET functions to produce the initial equilibrium formulated in table 2 such that all prices are unity, i.e. $\bar{\pi}^m = \bar{\pi}^e = r = P^x = P^m = P^e = 1$. 14/

Table 3 shows the effects on the welfare indicator, Q, (Col. 3) and on the real exchange rate (Col. 4) of setting transfers equal to 10 -- i.e. to 10% of initial GDP -- under different values of the elasticities of import substitution and export transformation. Note that, in the limit, the increase in welfare is equal to the transfer itself. This result occurs when the marginal rate of transformation of production between sales to the domestic and export markets is infinite, i.e. in the Ricardian case discussed above. As expected, the required real exchange rate adjustment to absorb the transfer is an increasing function of the curvature of the CES and CET functions.

Table 2

Base Solution Values

Transfer ($\bar{B}$)	Exports (E)	Imports (M)	Domestic Demand (D)	GDP ($\bar{X}$)
0	25	25	75	100

In this example, the numeraire is $p^q \equiv 1$. Had we selected another numeraire such as fixing the value of the GDP deflator with base year quantity weights (i.e., to set $p^x \equiv 1$), then the equilibrium values of the "nominal" exchange rate (or conversion factor) in column 5 would have been replaced by the values appearing in column 6. Likewise, with $p^d \equiv 1$ as numeraire, the equilibrium values for the "nominal" exchange rate would have been given by the values in column 4. And, with $r \equiv 1$ as numeraire, the equilibrium value of p^d appearing in column 4 would have corresponded to the equilibrium value of the real exchange rate. Regardless of the choice of numéraire, the equilibrium values of the relative price indices appearing in columns 4 and 6 of table 3 remain unaltered.

In this one sector model, there is no ambiguity with respect to the appropriate definition of the real exchange rate, r/p^d. In applied work, however, two problems arise. In multisector CGE applications, a choice must be made with respect to the weights entering the aggregator for the domestic price index. Even though the choice of weights will affect the computed values for the equilibrium real exchange rate, the equilibrating mechanism working through changes in the real exchange rate is the same, no matter what price is chosen as numeraire.

The other problem relates to the choice of weights used to proxy the domestic price index in computations of real exchange rate indices. Typically, the domestic price index is proxied by some published price index such as the CPI or the GDP deflator, both of which include traded goods. As shown by the values in the last two columns of Table 3, when values of σ and Ω are low, the choice of proxy for the domestic price index makes a great deal of difference in the computed value of the real exchange rate. For example, with

Table 3

Welfare and Real Exchange Rate Calculations for an Increase in Transfers a/

σ b/	Ω c/	Q	r/p^d	r	r/p^x
(1)	(2)	(3)	(4)	(5)	(6)
.2	.2	106.9	.38	.46	.45
.5	.5	108.7	.68	.75	.74
2	2	109.6	.91	.93	.93
5	5	109.9	.96	.97	.97
5	∞	110.0	1.00	1.00	1.00

a/ Transfer ($\bar{B}$) set equal to 10.
b/ Elasticity of substitution in CES (eq.1, table 1 and eq.4.1).
c/ Elasticity of transformation in CET (eq.2, table 2 and eq.4.2).

$\sigma = \Omega = 0.5$, the real exchange rate index with CPI (or GDP) weights used as proxy has a value of 0.75 (0.74) whereas the correct value is 0.68.

Finally we come to the shape of the offer curve. It can be shown that the elasticity of the offer curve, ε^{oc}, is given by the following expression: 15/

$$\varepsilon^{oc} = -\frac{\alpha(\sigma+\Omega)+\lambda\sigma(\Omega+1)}{\Omega(1-\sigma)\lambda} \tag{4.3}$$

where

$$\lambda \equiv (1-\alpha)\left\{\frac{\alpha(1-\beta)}{(1-\alpha)\beta}\right\}^{\frac{\sigma(1+\Omega)}{\Omega+\sigma}}$$

From expression (4.3), it is clear that the offer curve will be vertical ($\varepsilon^{oc} = \infty$) for $\sigma = 1$, positively sloping ($\varepsilon^{oc} > 1$) for $\sigma > 1$ and negatively sloping ($\varepsilon^{oc} < 0$) for $\sigma < 1$. For given values of Ω, ε^{oc} monotonically decreases for increasing values of σ (with discontinuity at $\sigma = 1$). For given values of σ, the curvature of the offer curve is less (ε^{oc} is lower), the higher is the value of Ω. Finally, for given values of σ and Ω, the value of ε^{oc} is larger, the more open is the economy. 16/

Figures 5(a) and 5(b) trace the elasticity of the domestic offer curve for different values of σ, $\sigma \neq 1$. Negative values of ε^{oc} correspond to a backward bending offer curve. In this case, the income effect of an improvement in the terms of trade dominates the substitution effect and less exports are supplied. Negative values of ε^{oc} imply that the real exchange rate must appreciate to insure a greater supply to the domestic market (this is the case drawn in Figure 3). Raising the elasticity of export supply lowers the offer curve elasticity, which in the limit is unity. This result follows directly from the relation between the two elasticities along the

Figure 5
OFFER CURVE ELASTICITY

a) MEDIUM ECONOMY (E_o=M_o=25)
Offer Curves With High and Low Omega

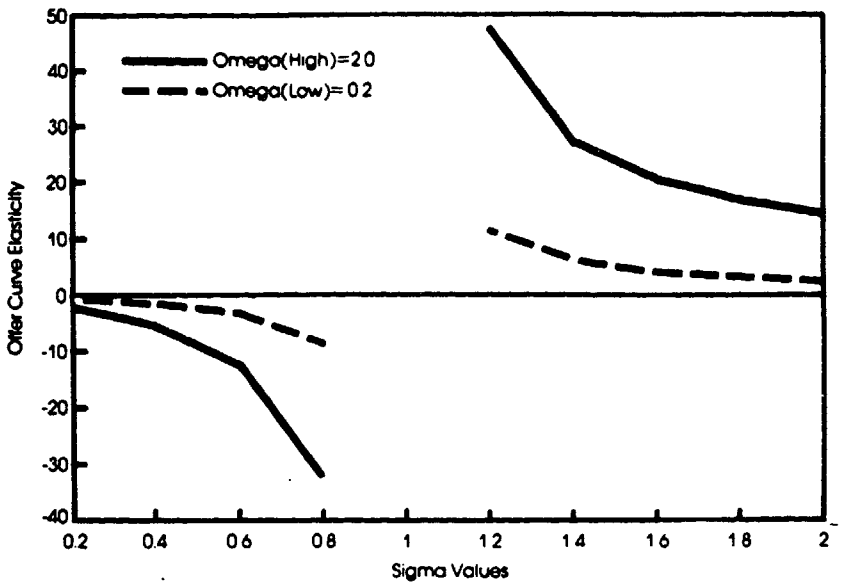

b) CLOSED AND OPEN ECONOMY OFFER CURVES
With Omega=1

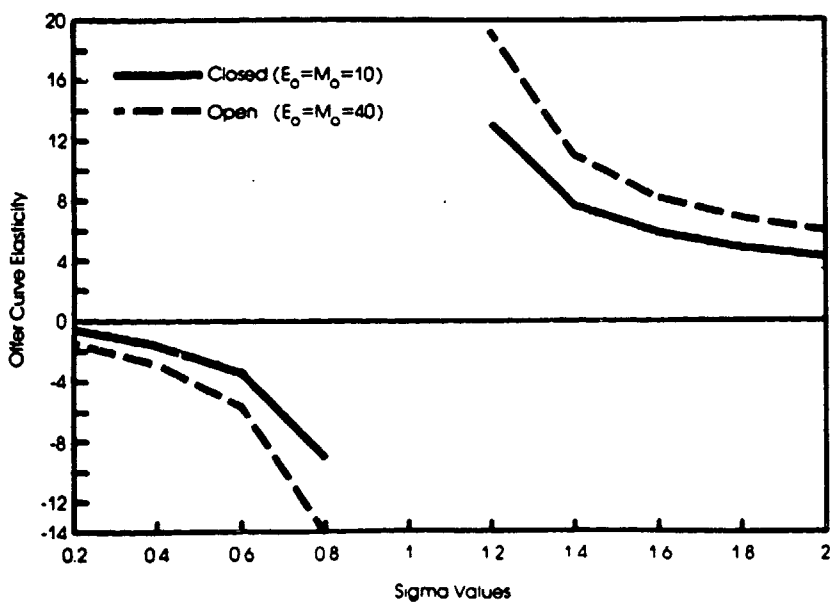

World Bank - 43114:5

external budget constraint. Increasing the degree of openess raises the offer curve elasticity, a result also found in standard trade-theoretic models.

Finally, Figure 6 traces the equilibrium values obtained from solving the model with the initial conditions in Table 6 under a high and a low set of trade substitution elasticities. Figure 6 draws the equilibrium values of the welfare indicator, the real exchange rate, and the import share in absorption for different values of the terms-of-trade. The arrows indicate the path of the variables as the terms-of-trade improve. As expected, welfare gains measured here in terms of absorption, Q) are larger for the higher set of trade substitution elasticities. The higher gain attributable to greater specialization appears as a much larger variation in the share of imports in absorption for the high value of σ. More importantly, Figure 6 confirms the critical role assumed by the value of σ in determining whether the real exchange rate will appreciate or depreciate when the terms-of-trade varies.

The two numerical examples in figure 6 could be construed to represent a developing country with a low import substitution elasticity and a developed country with a higher elasticity. For the developing country, adjusting to the deterioration in its terms-of-trade requires a real devaluation to generate increased exports required to pay for more expensive crucial imports. For the developed country, adjustment requires a real revaluation and a decline in the volume of foreign trade.

5. Conclusions

In this paper, we have studied systematically the typical external closure of many single-country applied general equilibrium trade models. We

Figure 6
WELFARE, REAL EXCHANGE RATE, AND TERMS OF TRADE

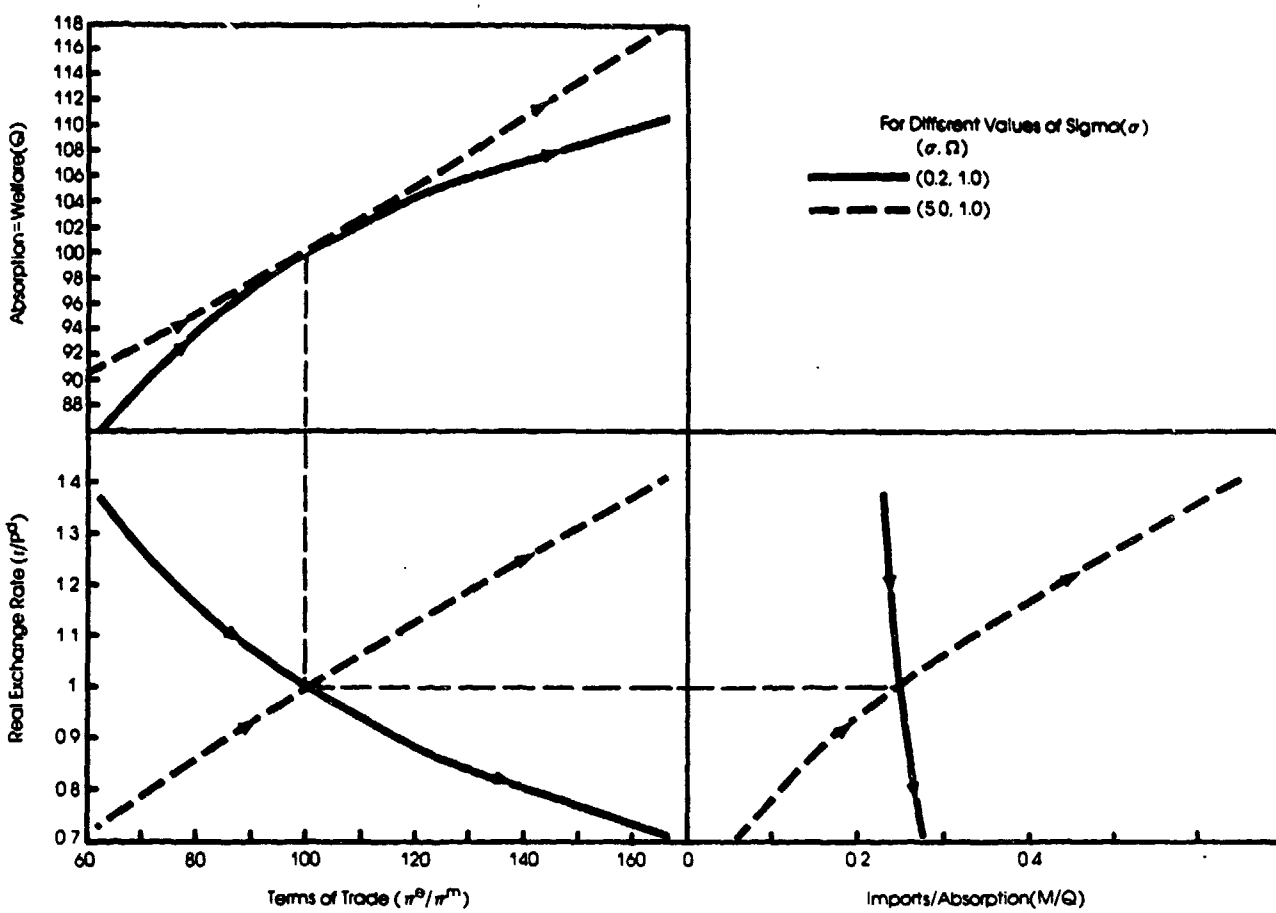

World Bank

have shown that the standard assumption of product differentiation on the import side can be naturally extended to the export side. An external closure with symmetric product differentiation for imports and exports is theoretically well-behaved and gives rise to normally shaped offer curves. We derive the elasticity of the domestic offer curve for a one sector model and illustrate the model with a numerical example. The numerical example illustrates, under different trade substitution elasticities, the implications of the choice of weights used as a proxy for the domestic price index in computations of real exchange rate indices. The model is also useful to illustrate the role of foreign trade elasticities in the popular Australian model with traded and non-traded goods. In particular, we show the crucial role of trade substitution elasticities on the import side in determining the direction of change of the real exchange rate for terms-of-trade perturbations.

Appendix

1. Derivation of Equilibrium Conditions in Figure 1.

To show that in equilibrium the MRS in consumption in quadrant (2) is equal to the MRT in production in quadrant (4), maximize (1) subject to (2) and (9) by setting the following Lagrangian:

Maximize:

(A1) $$L = Q - \lambda_x[\bar{X} - G(E,D)] - \lambda_b[\bar{B} - \bar{\pi}^m M + \bar{\pi}^e E]$$

The first-order conditions are

(A2) $$\frac{\partial L}{\partial D} = \frac{\partial Q}{\partial D} + \lambda_x[\frac{\partial G}{\partial D}] = 0$$

(A3) $$\frac{\partial L}{\partial M} = \frac{\partial Q}{\partial M} + \lambda_b[\bar{\pi}^m] = 0$$

(A4) $$\frac{\partial L}{\partial E} = \lambda_x[\frac{\partial G}{\partial E}] - \lambda_b\bar{\pi}^e = 0$$

From (A4)

(A5) $$\lambda_b = \lambda_x \frac{\partial G}{\partial E} / \bar{\pi}^e$$

Substitute (A5) into (A3):

(A6) $$\frac{\partial Q}{\partial M} = -\bar{\pi}^m \lambda_x \frac{\partial G}{\partial E}$$

Divide (A6) into (A2) to get:

$$\text{(A7)} \qquad \frac{\partial Q/\partial D}{\partial Q/\partial M} = \frac{\bar{\pi}^e}{\bar{\pi}^m} = \frac{\partial G/\partial D}{\partial G/\partial E}$$

Choose units so that $\bar{\pi}^e = \bar{\pi}^m = 1$. This establishes the condition asserted in the text, i.e.

$$\text{(A8)} \qquad \frac{\partial Q/\partial D}{\partial Q/\partial M} = \frac{p^d/p^q}{p^m/p^q} = \frac{\partial G/\partial D}{\partial G/\partial E} = \frac{p^d/p^x}{p^e/p^x} \quad \therefore \quad \frac{p^d}{p^m} = \frac{p^d}{p^e}$$

2. <u>Derivation of Elasticity of Offer Curve (Equation 4.3)</u> <u>17/</u>

We proceed in two steps. First, we derive the relation between M and E when MRS = MRT. In the second step we bring in the balance of trade constraint.

From (4.2) note that the CET defines a relation between E and D, i.e.

$$\text{(A9)} \qquad D\,(E,\bar{X}) = \left[\frac{\bar{X}^h}{(1-\alpha)\bar{A}_2^h} - \frac{\alpha}{(1-\alpha)}E^h\right]^{\frac{1}{h}}$$

Using (A9) in the FOC of the Lagrangian in (A1) we have:

$$\text{(A10)} \qquad \frac{\partial L}{\partial M} = \frac{\partial Q}{\partial M} + \lambda_b\,\bar{\pi}^m = 0$$

$$\text{(A11)} \qquad \frac{\partial L}{\partial E} = \frac{\partial Q}{\partial D}\frac{\partial D}{\partial E} - \lambda_b\,\bar{\pi}^e = 0$$

Dividing (A10) and (A11) and rearranging gives:

$$\text{(A12)} \qquad \frac{\partial Q}{\partial M} = -\frac{\bar{\pi}^m}{\bar{\pi}^e}\frac{\partial Q}{\partial D}\cdot\frac{\partial D}{\partial E}$$

The partial derivatives in (A12) are obtained from differentiation of (4.1), (4.2) and (A9).

$$\text{(A13)} \qquad \frac{\partial Q}{\partial M} = \beta \bar{A}_1 \left(\beta M^{-\rho} + (1-\beta) D^{-\rho}\right)^{\frac{-(1+\rho)}{\rho}} M^{-(\rho+1)}$$

$$\text{(A14)} \qquad \frac{\partial Q}{\partial D} = (1-\beta)\, \bar{A}_1 \left(\beta M^{-\rho} + (1-\beta) D^{-\rho}\right)^{\frac{-(1+\rho)}{\rho}} D^{-(\rho+1)}$$

$$\text{(A15)} \qquad \frac{\partial D}{\partial E} = \frac{-\alpha}{1-\alpha} \left[\frac{\bar{X}^h}{\bar{A}_2^h (1-\alpha)} - \frac{\alpha}{(1-\alpha)} E^h \right]^{\frac{1-h}{h}} E^{h-1}$$

Substitution of (A13), (A14) and (A15) into (A12) yields, after manipulation, the following:

$$\text{(A16)} \qquad M = \left(\frac{\bar{\pi}^m}{\bar{\pi}^e} \frac{\alpha(1-\beta)}{(1-\alpha)\beta}\right)^{\frac{-1}{\rho+1}} \left[\frac{\bar{X}^h}{\bar{A}_2^h (1-\alpha)} - \frac{\alpha}{(1-\alpha)} E^h \right]^{\frac{\rho+h}{(\rho+1)h}} E^{-\frac{h-1}{\rho+1}}$$

Which gives the relation between M and E when MRS = MRT.

The second step involves taking into account the balance of trade constraint,

$$\text{(A17)} \qquad E = \frac{\bar{\pi}^m}{\bar{\pi}^e} M$$

Substituting (A16) into (A17) and rearranging gives the required equilibrium relation between E and M:

$$\text{(A18)} \qquad E = \frac{\bar{X}}{\bar{A}_2} \left\{ \alpha + (1-\alpha) \left[\left(\frac{\bar{\pi}^e}{\bar{\pi}^m}\right)^{1-\sigma} \left(\frac{\alpha(1-\beta)}{(1-\alpha)\beta}\right)^{\sigma} \right]^{\frac{\Omega+1}{\Omega+\sigma}} \right\}^{-\frac{\Omega}{1+\Omega}}$$

To get an expression for the elasticity of the offer curve, ε^{oc}, note that the following relationships hold along an offer curve:

(A19) $$\varepsilon^{oc} = \frac{1}{\varepsilon_x^s} + 1 \quad ; \quad \varepsilon_x^s + \varepsilon_m^d = -1$$

where

$$\varepsilon^{oc} \equiv \frac{d \log M}{d \log E} \quad ; \quad \varepsilon_m^d \equiv \frac{d \log M}{(d \log \frac{\bar{\pi}^m}{\bar{\pi}^e})} \quad ; \quad \varepsilon^s_x \equiv \frac{d \log E}{(d \log \frac{\bar{\pi}^e}{\bar{\pi}^m})}$$

Log differentiation of (A18) and some algebraic manipulation eventually yields:

(A20) $$\varepsilon_x^s = \frac{-\Omega(1-\alpha)(1-\sigma)\gamma^{\frac{\sigma(1+\Omega)}{\Omega+\sigma}}}{(\sigma+\Omega)\{\alpha+(1-\alpha)[(\frac{\bar{\pi}^e}{\bar{\pi}^m})^{(1-\sigma)\gamma}\sigma]^{\frac{\Omega+1}{\Omega+\sigma}}\}} (\frac{\bar{\pi}^e}{\bar{\pi}^m})^{\frac{(1-\sigma)(1+\Omega)}{\Omega+\sigma}}$$

where

$$\gamma \equiv \frac{\alpha(1-\beta)}{(1-\alpha)\beta}$$

By choice of units let $\bar{\pi}^e = \bar{\pi}^m = 1$. Then (A20) simplifies to

(A21) $$\varepsilon_x^s = \frac{-\Omega(1-\sigma)\lambda}{(\sigma+\Omega)\ (\alpha+\lambda)}$$

where

$$\lambda \equiv (1-\alpha)\ \gamma^{\left[\frac{\sigma(1+\Omega)}{(\Omega+\sigma)}\right]}$$

Substitution of (A21) into (A19) yields equation (4.3) in the text.

Footnotes

1/ Dervis, de Melo and Robinson (1982) -- henceforth DMR -- review the theoretical specification of single country trade models and present a number of applications analyzing the types of issues mentioned above. Robinson (1989) reviews recent models.

2/ Whalley and Yeung (1984), p. 126.

3/ WY also note that because export and import demand elasticities are not independent, the reduced forms for the export and import demand functions differ from the specification intended. Although econometricians do not typically incorporate the restrictions implied by balanced trade when they estimate export demand and import supply elasticities, the point that trade balance restrictions should be recognized in specifying combinations of export demand and import supply elasticities is correct and nicely made. For a general treatment in the n-commodity case see Jones and Berglas (1977).

4/ See for instance DMR chp. 6, sections 2 and 3, who discuss the role of the real exchange rate in general equilibrium models.

5/ WY do consider in equations (22-25) a formulation with one domestic good, but only for an exchange economy. As argued below, this formulation is not a simplified representation of a typical single-country CGE trade model.

6/ See DMR ch. 6 for a discussion of specialization and ch. 7 for an alternative specification for export behavior. The empirical importance of terms-of-trade effects with downward-sloping foreign export demand curves is shown in chapter 9.

7/ The CET formulation was first suggested by Powell and Gruen (1969). Though more elegant and easier to work with than the logistic supply curve proposed by DMR, it can be shown that the two specifications

are empirically very close for local changes around equilibrium. De Melo and Robinson (1985) explore analytically in a partial equilibrium context, the implications of product differentiation on the domestic price system.

8/ Under appropriate numeraire selection, r becomes the real exchange rate, in which case it should be referred to as such.

9/ In fact, for the analysis here, we could assume that equation 1 is a utility function which consumers seek to maximize.

10/ If we replace equation 1 with an explicit utility function, the "iso-goods" can be interpreted as indifference curves. Nothing changes in the analysis.

11/ This result can be derived from the maximization of (1) subject to (2) and (9) and is derived in the appendix.

12/ Note that for $0 < \zeta < 1$, the external constraint slopes downwards.

13/ We show below that the shape of the domestic offer curve depends on the two substitution elasticities and on trade shares.

14/ The numeraire is $P^q \equiv 1$ and the solution is found by solving the maximization problem set in the appendix using the GAMS package developed by Arne Drud and Alex Meeraus.

15/ This result is derived in the appendix with $\pi^e = \pi^m = 1$ by choice of units.

16/ Openess is defined in the sense of high initial trade (E/D, M/D) shares.

17/ We thank David Roland-Holst for suggesting the approach followed in this derivation.

References

Anderson, J., 1985, "The Inefficiency of Quotas: The Cheese Case," American Economic Review, 75, 1, 178-190.

Armington, P., 1969, "A Theory of Demand for Products Distinguished by Place of Production," IMF Staff Papers, 16, 159-176.

Deardorff, A. V. and R. M. Stern, 1986, "The Michigan Model of World Production and Trade, (MIT Press, Cambridge).

Dervis, K., J. de Melo, and S. Robinson, 1982, General Equilibrium Models for Development Policy, (Cambridge University Press, Cambridge, England).

Dixon, P. B., B. Parmenter, J. Sutton, and D.P. Vincent, 1982, ORANI: A Multisector Model of the Australian Economy, (North-Holland, Amsterdam).

Jones, R. W. and E. Berglas, 1977, "Import Demand and Export Supply: An Aggregation Theorem", American Economic Review, 67, 183-7.

Melo, J. de and S. Robinson, 1985, "Product Differentiation and Trade Dependence of the Domestic Price System in Computable General Equilibrium Trade Models," in T. Peeters, et al, eds. International Trade and Exchange Rates, 91-107, (North-Holland, Amsterdam).

Powell, A. and F. Gruen, 1968, "The Constant Elasticity of Transformation Production Frontier and Linear Supply System," International Economic Review, 9, 315-28.

Robinson, S., 1989, "Multisectoral Models of Developing Countries: A Survey," in H.B. Chenery and T.N. Srinivasan, eds., Handbook of Development Economics, (North-Holland, Amsterdam), forthcoming.

Whalley, J., 1985, Trade Liberalization among Major World Trading Areas, (MIT Press, Cambridge).

Whalley, J. and B. Yeung, 1984, "External Sector 'Closing' Rules in Applied General Equilibrium Models," Journal of International Economics, 16, 123-38.

PPR Working Paper Series

	Title	Author	Date	Contact
WPS125	The Effects of Financial Liberalization on Thailand, Indonesia and the Philippines	Christophe Chamley Qaizar Hussain	October 1988	A. Bhalla 60359
WPS126	Educating Managers for Business and Goverment: A Review of International Experience	Samuel Paul John C. Ickis Jacob Levitsky	November 1988	E. Madrona 61711
WPS127	Linking Development, Trade, and Debt Strategies in Highly Indebted Countries	Ishac Diwan	November 1988	I. Diwan 33910
WPS128	Public Finances in Adjustment Programs	Ajay Chhibber J. Khalilzadeh-Shirazi	December 1988	A. Bhalla 60359
WPS129	Women in Development: Defining the Issues	Paul Collier	December 1988	J. Klous 33745
WPS130	Maternal Education and the Vicious Circle of High Fertility and Malnutrition: An Analytic Survey	Matthew Lockwood Paul Collier	December 1988	J. Klous 33745
WPS131	Implementing Direct Consumption Taxes in Developing Countries	George R. Zodrow Charles E. McLure, Jr.	December 1988	A. Bhalla 60359
WPS132	Is the Discount on the Secondary Market A Case for LDC Debt Relief?	Daniel Cohen	November 1988	M. Luna 33729
WPS133	Lewis Through a Looking Glass: Public Sector Employment, Rent-Seeking and Economic Growth	Alan Gelb J.B. Knight R.H. Sabot	November 1988	A. Hodges 61268
WPS134	International Trade in Financial Services	Silvia B. Sagari	January 1989	W. Pitayatonakar 60353
WPS135	PPR Working Papers Catalog of Numbers 1 to 105	PPR Dissem. Center	November 1988	Ann Van Aken 31022

PPR Working Paper Series

	Title	Author	Date	Contact
WPS136	Pricing Commodity Bonds Using Binomial Option Pricing	Raghuram Rajan	December 1988	J. Raulin 33715
WPS137	Trends in Nontariff Barriers of Developed Countries: 1966 to 1986	Sam Laird Alexander Yeats	December 1988	J. Epps 33710
WPS138	Fiscal Adjustment and Deficit Financing During the Debt Crisis	William R. Easterly	January 1989	R. Luz 61760
WPS139	A Conceptual Framework for Adjustment Policies	Bela Balassa	January 1989	N. Campbell 33769
WPS140	Building Educational Evaluation Capacity in Developing Countries	John Middleton James Terry Deborah Bloch	February 1989	C. Cristobal 33640
WPS141	Payroll Taxes for Financing Training in Developing Countries	Adrian Ziderman	January 1989	C. Cristobal 33640
WPS142	Vocational Secondary Schooling in Israel: A Study of Labor Market Outcomes	Adrian Ziderman	January 1989	C. Cristobal 33640
WPS143	Decentralization in Education: An Economic Perspective	Donald R. Winkler		
WPS144	Product Differentiation and the Treatment of Foreign Trade in CGE Models of Small Economies	Jaime de Melo Sherman Robinson	February 1989	K. Cabana 61539
WPS145	Revenue Raising Taxes: General Equilibrium Evaluation of Alternative Taxation in U.S. Petroleum Industries	Jaime de Melo Julie Stanton David Tarr	February 1989	K. Cabana 61539
WPS146	Exchange Rate-Based Disinflation, Wage Rigidity, and Capital Inflows: Tradeoffs for Chile 1977-81	Timothy Condon Vittorio Corbo Jaime de Melo	February 1989	K. Cabana 61539